MD40A,TMD40A,TMD40B,TMD40C,AQD40A,TAMD40A,TAMD40B,AQAD40A,AQAD40B

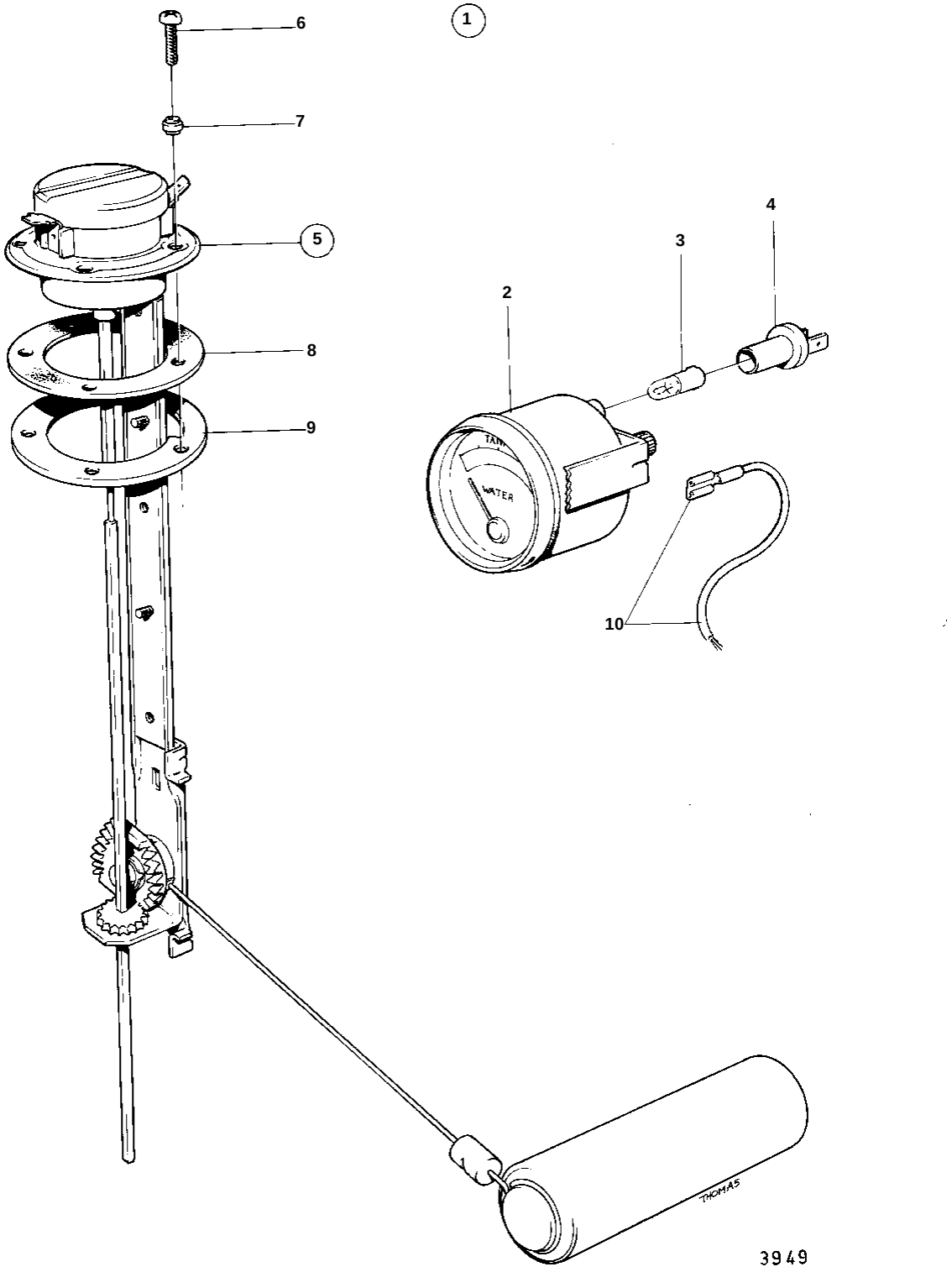

TANK METER KIT FOR FUEL AND DRINKING WATER, EARLIER PROD: 834399

MD40A,TMD40A,TMD40B,TMD40C,AQD40A,TAMD40A,TAMD40B,AQAD40A,AQAD40B

REF	PART NO.	QTY	DESCRIPTION		NOTES
1	834399	1	Tank gauge		FOR FUEL.
2	834378	1	· Tank gauge		
3	19923	1	· Bulb		
4	808175	1	· Bulb socket		
5	837999	1	· Tank sensor		
6	956078	4	· · Screw		L = 16 MM
	956081	1	· · Screw		L = 25 MM
7	834481	5	· · Gasket		
8	89865	1	· · Gasket		
9	834480	1	· · Flange		
10		X	CABLES AND CABLE TERMINALS		SEE GROUP 3